LATE MODEL RESTORATION

Prop. 65 Warning for California Residents

WARNING: This product may contain chemicals known to the State of California to cause cancer, birth defects, or other reproductive harm.

Digital Gauge Cluster (1987-93) Basic Wiring Guide

CONTROL BOX DIAGRAM

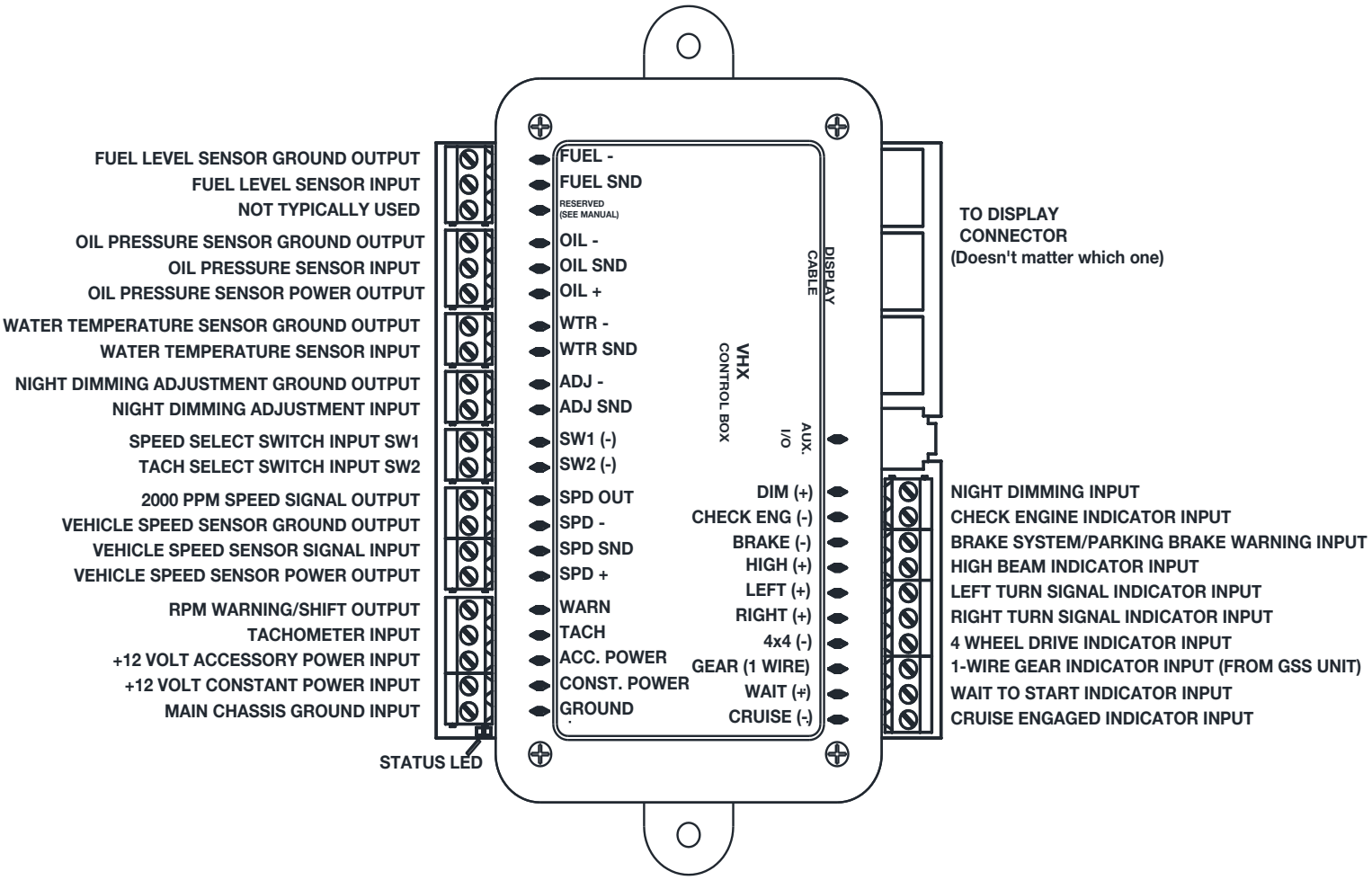

Disclaimer

By using this instruction sheet, you agree that other than as expressly stated in the LMR Terms and Conditions (Agreement) or as required by the laws of the state of Texas or applicable United States federal law (Applicable Law), this instruction sheet is provided "AS IS" and LMR does not make any specific representations or warranties about this instruction sheet. For example, LMR does not make any warranties about: (a) the content provided in this instruction sheet; (b) any specific features of this instruction sheet, or its accuracy, reliability, or ability to meet your needs. The knowledge and experience level of users of this instruction sheet vary widely; if you do not have adequate knowledge and experience to use this instruction sheet and safely accomplish the tasks described, please hire a professional to assist you for your safety and the safety of your vehicle and others.

Limitation of Liability

Except as required by Applicable Law, LMR, its affiliates, officers, directors, employees and agents will not be responsible for any loss of profits, revenues, business opportunities, goodwill, or anticipated savings, indirect or consequential loss, punitive damages caused by:

- Errors, mistakes, or inaccuracies in this instruction sheet
- Personal injury or property damage resulting from your use of this instruction sheet

This limitation of liability provision applies to any claim regardless of whether the claim asserted is based on warranty, contract, tort or any other legal theory.

Use this information at your own risk. Any injury, damage, or loss that may result from use of the tools, equipment, products, or information contained in this instruction sheet is the sole responsibility of the user.

Indemnity

To the extent permitted by Applicable Law, you agree to defend, indemnify and hold harmless LMR, its Affiliates, officers, directors, employees, agents, information providers, licensors, and other partners from and against any and all claims, damages, obligations, losses, liabilities, costs or debt, and expenses (including but not limited to attorney's fees) arising from: (i) your use of and access to this instruction sheet; (ii) your violation of any term of the Agreement; (iii) your violation of any third party right, including without limitation any copyright, property, or privacy right; or (iv) any claim that your actions caused damage to LMR or a third party. The defense and indemnification obligations will survive this Agreement and your use of this instruction sheet.

FIND YOUR NEXT MOD! SHOP 1000s OF PARTS ONLINE 24/7 @ LMR.COM

Copyright © 2020 LMR All rights reserved. No part of this publication may be reproduced, distributed, or transmitted in any form or by any means.

FORD MUSTANG WIRING DIAGRAM
FOR 1990-1993 INSTRUMENT CLUSTER

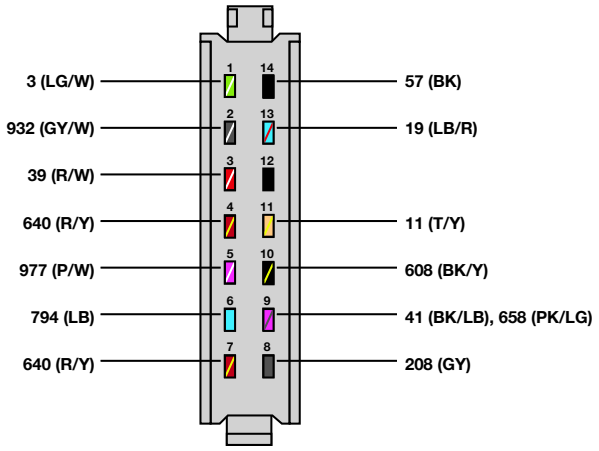

C250
INSTRUMENT CLUSTER

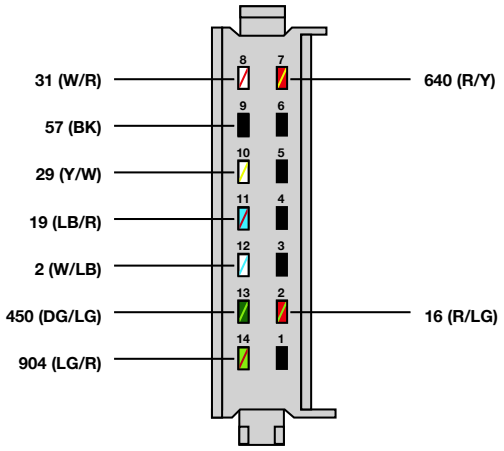

C251
INSTRUMENT CLUSTER

PIN NUMBER	CIRCUIT	CIRCUIT FUNCTION	PIN NUMBER	CIRCUIT	CIRCUIT FUNCTION
1	LG/W	LEFT TURN INDICATOR	1	NOT USED	NOT USED
2	GY/W	HI BEAM INDICATOR	2	R/LG	IGNITION SWITCH
3	R/W	COOLANT TEMP. SENDER FEED	3	NOT USED	NOT USED
4	R/Y	12V INPUT 1	4	NOT USED	NOT USED
5	P/W	CHECK BRAKE INDICATOR FEED	5	NOT USED	NOT USED
6	LB	LOW COOLANT INDICATOR FEED	6	NOT USED	NOT USED
7	R/Y	12V INPUT 1	7	R/Y	12V INPUT 1
8	GY	CHECK OIL INDICATOR FEED	8	W/R	OIL PRESSURE GAUGE FEED
9	BK/LB, PK/LG	MALFUNCTION INDICATOR LAMP (MIL) FEED	9	BK	GROUND
10	BK/Y	AIR BAG INDICATOR	10	Y/W	FUEL GAUGE FEED
11	T/Y	TACHOMETER FEED	11	LB/R	ILLUMINATION FEED
12	NOT USED	NOT USED	12	W/LB	RIGHT TURN INDICATOR
13	LB/R	ILLUMINATION FEED	13	DG/LG	FASTEN BELTS INDICATOR
14	BK	GROUND	14	LG/R	BATTERY INDICATOR FEED

90-93 Instrument Cluster Connector Wiring

LH Connector (C250)

Pin 1 (LG/W) - Connect to "LEFT (+)" on the control box
Pin 2 (GY/W) - Connect to "HIGH (+) on the control box
Pin 4 (R/Y) - Connect to "ACC POWER" on the control box
Pin 5 (P/W) - Connect to "BRAKE (-) on the control box
Pin 9 (PK/LG) - Connect to "CHECK ENG (-) on the control box
Pin 11 (T/Y) - Connect to "TACH" on the control box
Pin 13 (LB/R) - Connect to "DIM (+) on the control box

RH Connector (C251)

Pin 10 (Y/W) - Connect to "FUEL SND" on the control box
Pin 12 (W/LB) - Connect to "RIGHT (+)" on the control box
Pin 2 (R/LG) & Pin 14 (LG/R) - Splice the provided alternator load resistor between these to circuits. The orientation of the load resistor harness does not matter.

FIND YOUR NEXT MOD! SHOP 1000s OF PARTS ONLINE 24/7 @ LMR.COM

Copyright © 2020 LMR All rights reserved. No part of this publication may be reproduced, distributed, or transmitted in any form or by any means.

FORD MUSTANG WIRING DIAGRAM
FOR 1987-1989 INSTRUMENT CLUSTER

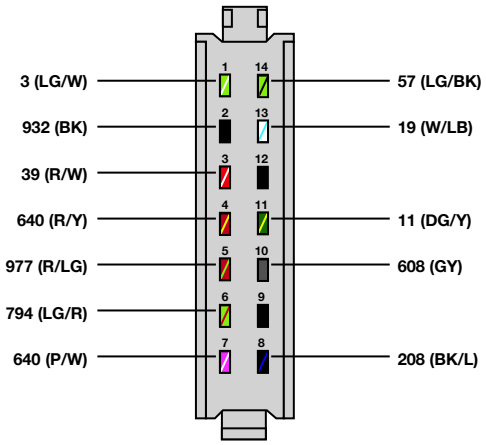

C250
INSTRUMENT CLUSTER

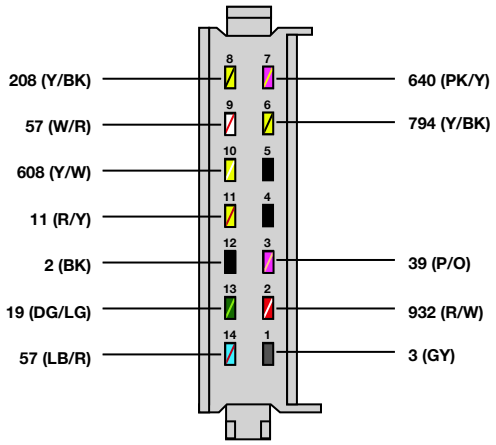

C251
INSTRUMENT CLUSTER

PIN NUMBER	CIRCUIT	CIRCUIT FUNCTION	PIN NUMBER	CIRCUIT	CIRCUIT FUNCTION
1	LG/W	LEFT TURN INDICATOR	1	GY	LOW OIL INDICATOR LAMP
2	BK	GROUND	2	R/W	SWITCH TO WARNING LAMP
3	R/W	TEMP. TO SENDER	3	P/O	NOT USED
4	R/Y	WARNING LAMPS FEED	4	NOT USED	NOT USED
5	R/LG	IGNITION SWITCH TO COIL-BATT	5	NOT USED	NOT USED
6	LG/R	IGNITION SWITCH TO ALT REG	6	Y/BK	SIGNAL UNIT TO FUEL SIGNAL RELAY
7	P/W	BRAKE WARNING SIGNAL LIGHT	7	PK/Y	WASHER FLUID LOW INDICATOR
8	BK/L	WARNING LAMP PROVE OUT 2	8	Y/BK	SIGNAL UNIT LAMP TO FUEL SIGNAL RELAY
9	NOT USED	NOT USED	9	W/R	OIL PRESSURE SIGNAL
10	GY	LOW OIL LEVEL TO SIGNAL	10	Y/W, LB	FUEL GAUGE FEED
11	DG/Y	TACHOMETER FEED	11	R/Y	WARNING LAMPS FEED
12	NOT USED	NOT USED	12	BK	GROUND
13	W/LB	RIGHT TURN SIGNAL INDICATOR	13	DG/LG	COOLANT TEMP RELAY FEED
14	LG/BK	HIGH BEAM INDICATOR	14	LB/R	INSTRUMENT PANEL LAMPS FEED

87-89 Instrument Cluster Connector Wiring

LH Connector (C250)

Pin 1 (LG/W) - Connect to "LEFT (+)" on the control box
Pin 5 (R/LG) & Pin 6 (LG/R) - Splice the provided alternator load resistor between these to circuits. The orientation of the load resistor harness does not matter.
Pin 7 (P/W) - Connect to "BRAKE (-) on the control box
Pin 8 (T) - Connect to "CHECK ENG (-) on the control box
Pin 11 (DG/Y) - Connect to "TACH" on the control box
Pin 13 (W/LB) - Connect to "RIGHT (+)" on the control box
Pin 14 (LG/BK) - Connect to "HIGH (+) on the control box

RH Connector (C251)

Pin 10 (Y/W) - Connect to "FUEL SND" on the control box
Pin 11 (R/Y) - Connect to "ACC POWER" on the control box
Pin 14 (LB/R) - Connect to "DIM (+) on the control box

FIND YOUR NEXT MOD! SHOP 1000s OF PARTS ONLINE 24/7 @ LMR.COM

Copyright © 2020 LMR All rights reserved. No part of this publication may be reproduced, distributed, or transmitted in any form or by any means.

87-93 VSS (Vehicle Speed Sensor) Wiring

The factory VSS + (feed) wire can be found behind the LH (driver side) kick panel. The factory wire color from the sensor is DG/W. For 91-93 models, the wire changes color on the female side of the connector to GY/BK. There are two wires occupying this location. One wire runs to the Speed Control Amplifier and the other wire runs to the PCM. Either wire can be used for VSS + (feed). Connect to "SPD SND" on the control box.

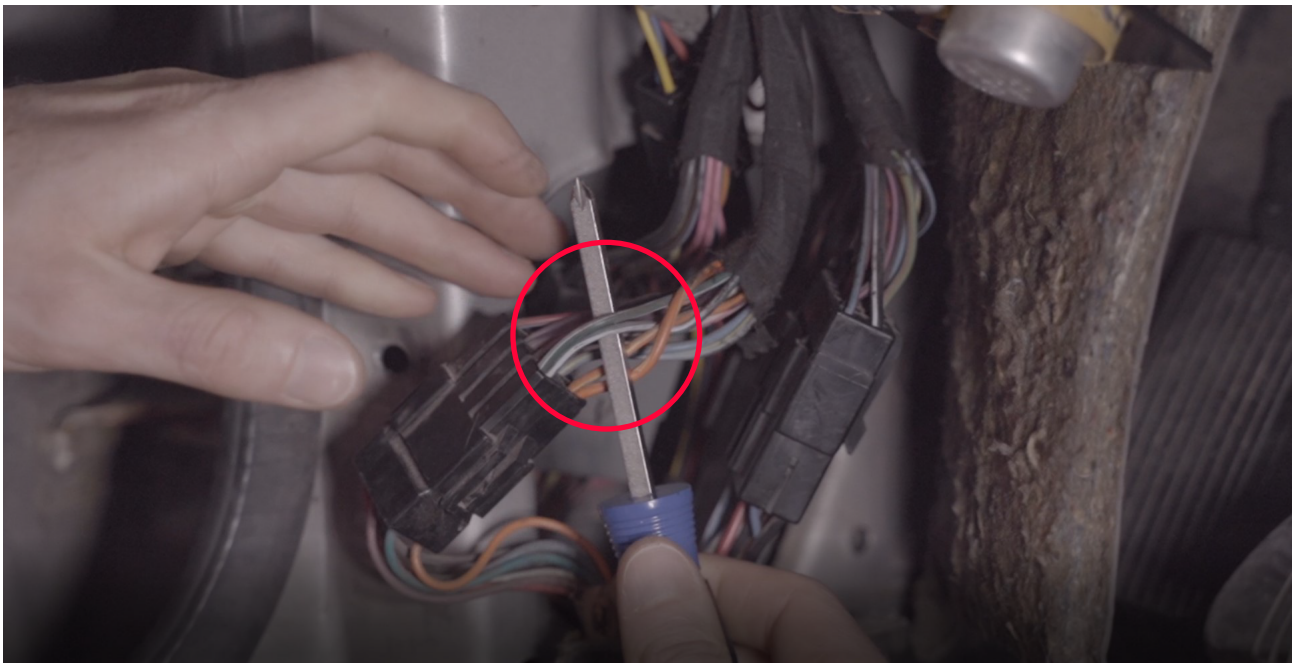

Please reference the main installation guide for more information and control box troubleshooting.

WATCH THE INSTALL VIDEO HERE!

Disclaimer

By using this instruction sheet, you agree that other than as expressly stated in the LMR Terms and Conditions (Agreement) or as required by the laws of the state of Texas or applicable United States federal law (Applicable Law), this instruction sheet is provided "AS IS" and LMR does not make any specific representations or warranties about this instruction sheet. For example, LMR does not make any warranties about: (a) the content provided in this instruction sheet; (b) any specific features of this instruction sheet, or its accuracy, reliability, or ability to meet your needs. The knowledge and experience level of users of this instruction sheet vary widely; if you do not have adequate knowledge and experience to use this instruction sheet and safely accomplish the tasks described, please hire a professional to assist you for your safety and the safety of your vehicle and others.

Limitation of Liability

Except as required by Applicable Law, LMR, its affiliates, officers, directors, employees and agents will not be responsible for any loss of profits, revenues, business opportunities, goodwill, or anticipated savings, indirect or consequential loss, punitive damages caused by:

- Errors, mistakes, or inaccuracies in this instruction sheet
- Personal injury or property damage resulting from your use of this instruction sheet

This limitation of liability provision applies to any claim regardless of whether the claim asserted is based on warranty, contract, tort or any other legal theory.

Use this information at your own risk. Any injury, damage, or loss that may result from use of the tools, equipment, products, or information contained in this instruction sheet is the sole responsibility of the user.

Indemnity

To the extent permitted by Applicable Law, you agree to defend, indemnify and hold harmless LMR, its Affiliates, officers, directors, employees, agents, information providers, licensors, and other partners from and against any and all claims, damages, obligations, losses, liabilities, costs or debt, and expenses (including but not limited to attorney's fees) arising from: (i) your use of and access to this instruction sheet; (ii) your violation of any term of the Agreement; (iii) your violation of any third party right, including without limitation any copyright, property, or privacy right; or (iv) any claim that your actions caused damage to LMR or a third party. The defense and indemnification obligations will survive this Agreement and your use of this instruction sheet.

FIND YOUR NEXT MOD! SHOP 1000s OF PARTS ONLINE 24/7 @ LMR.COM

Copyright © 2020 LMR All rights reserved. No part of this publication may be reproduced, distributed, or transmitted in any form or by any means.